Wall Mixer with Connector for Hand Shower arrangement with Connecting Legs,
Wall Flanges & Wall Bracket for Hand Shower
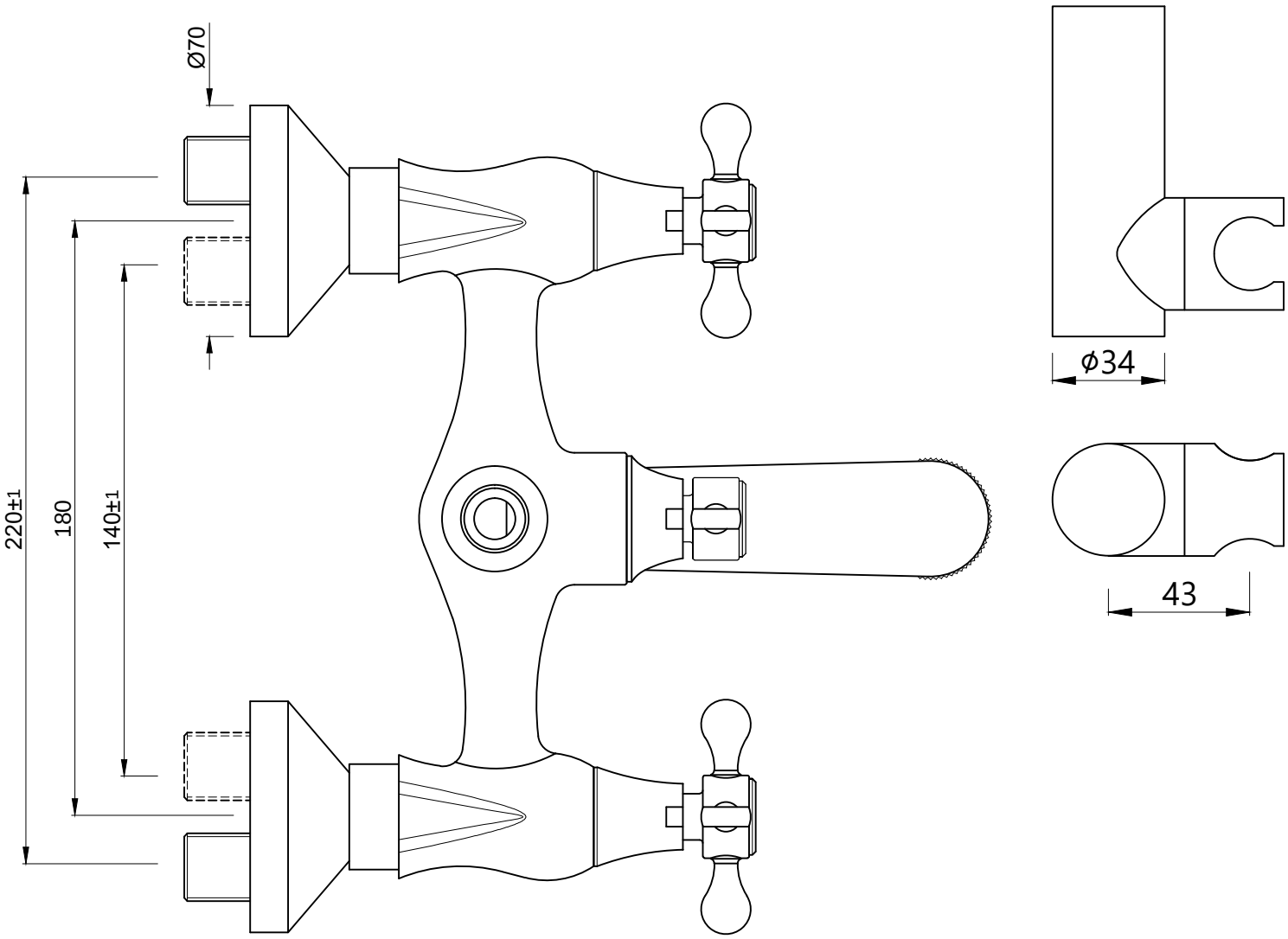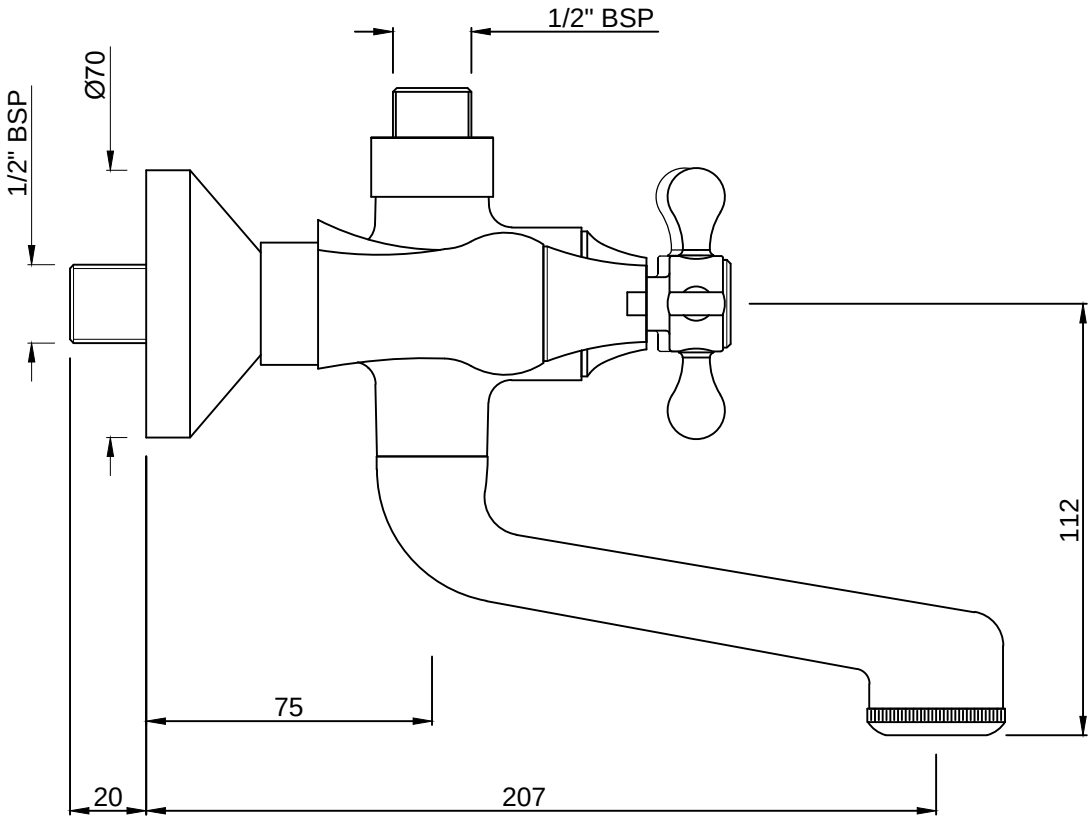
CAT.NO. QQP-7267PM