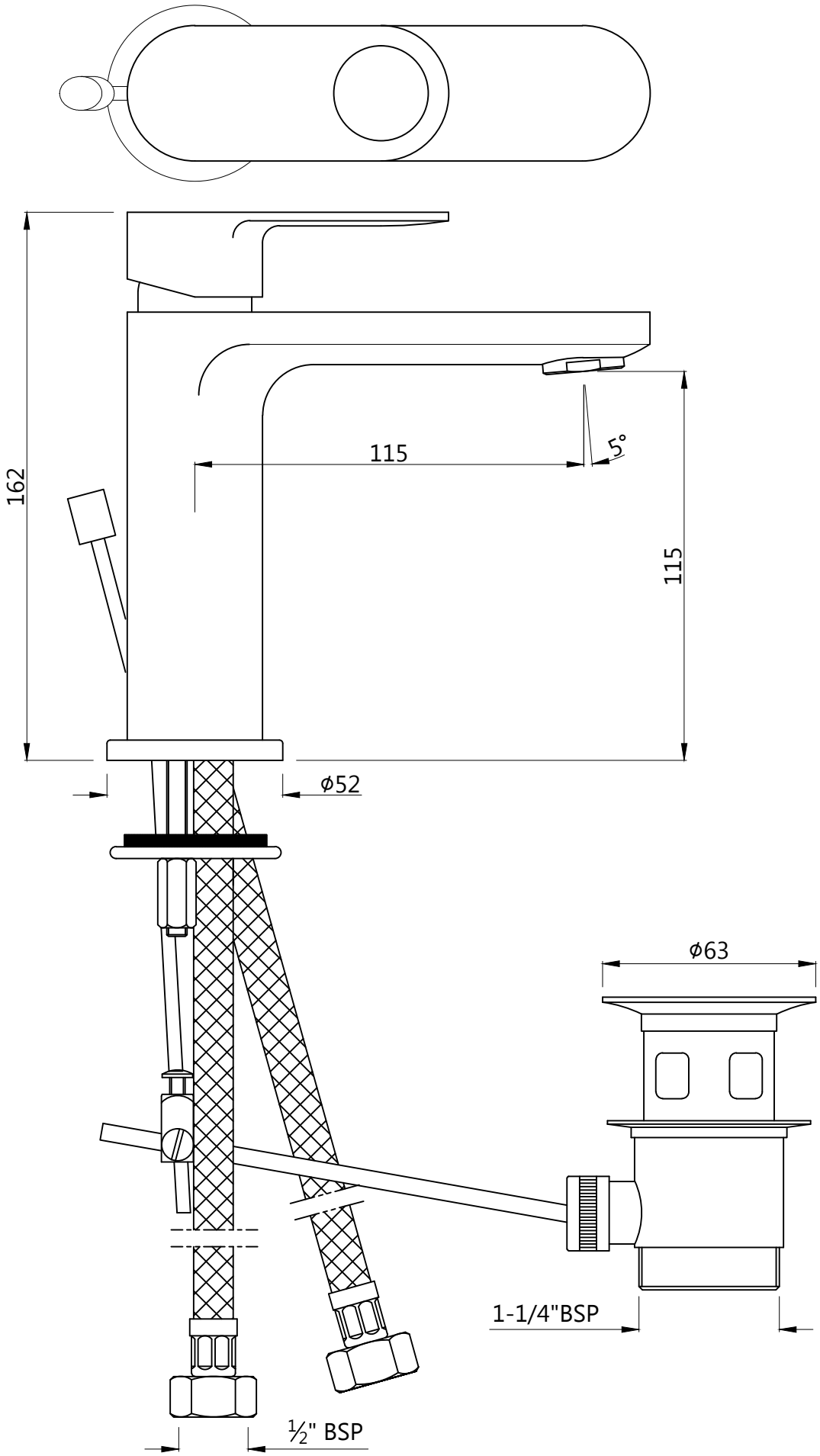Single Lever Basin Mixer with Popup Waste System and Braided Hoses	Cat. No.-ORP-10051BPM