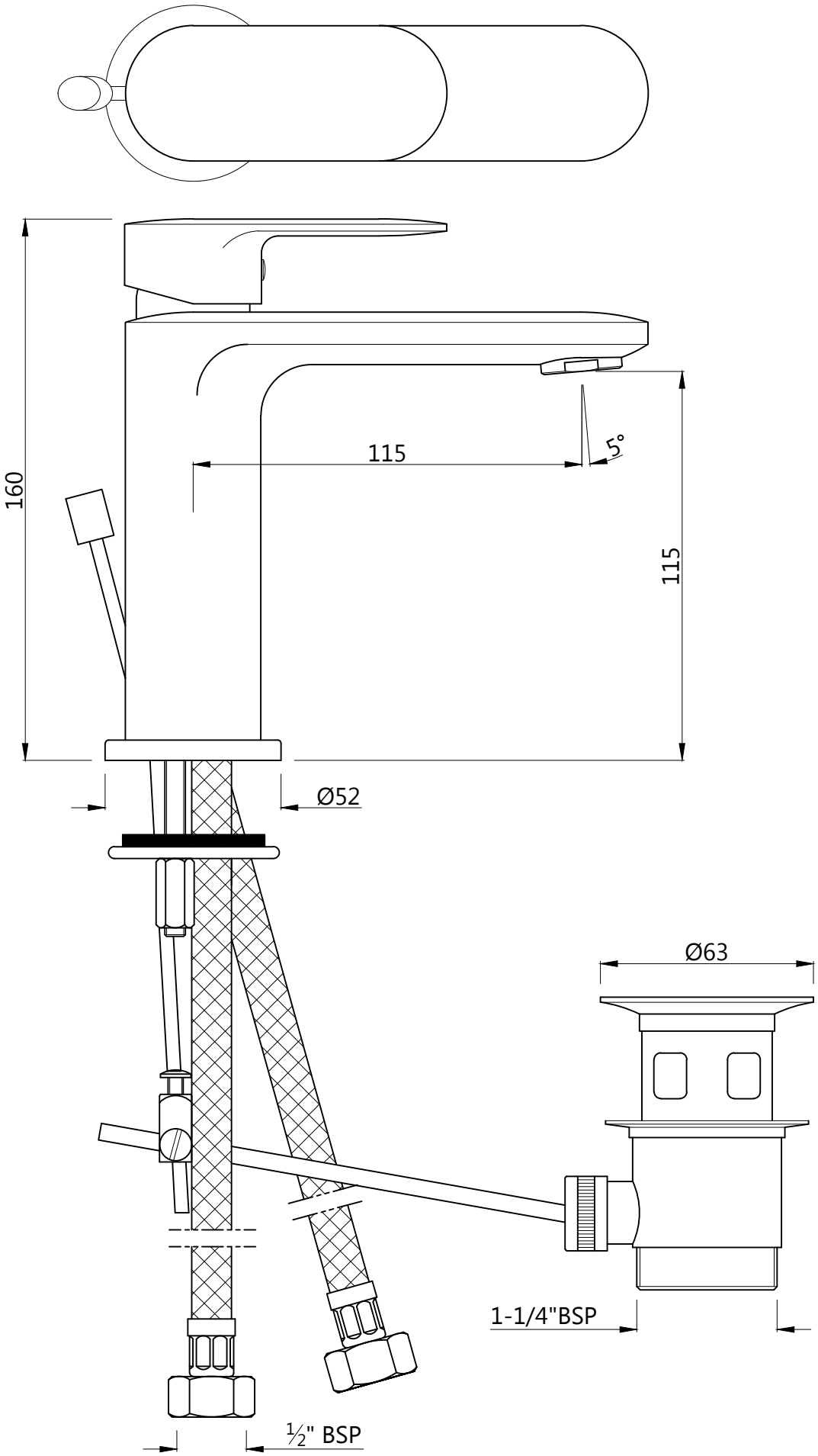Single Lever Basin Mixer with Popup Waste System & Braided Hoses	Cat. No.-OPP-15051BPM