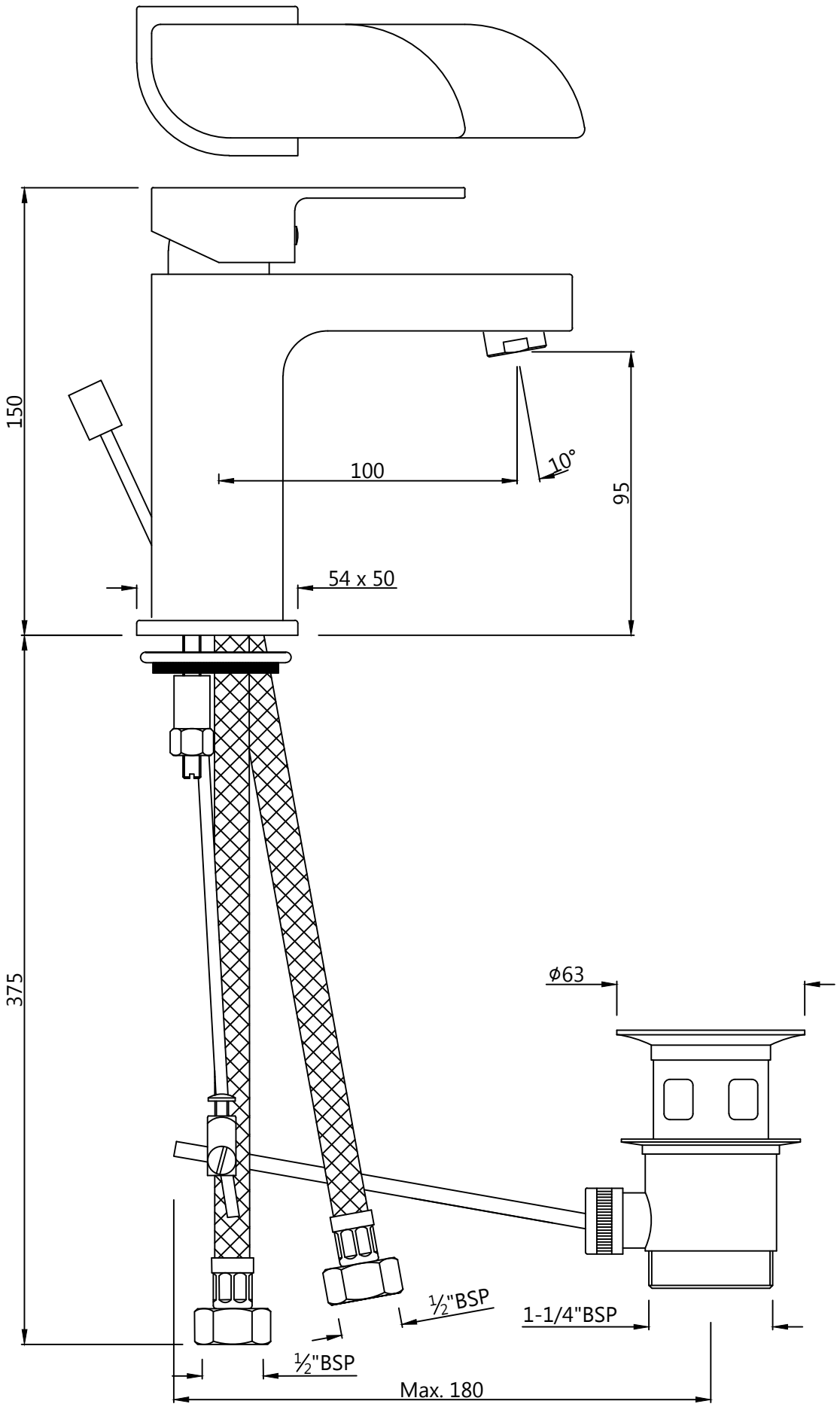Single Lever Basin Mixer with Popup Waste System with 375mm Long Braided Hoses	Cat. No.-ALI-85051B